Electric Motors

IE3 Motors

hoyermotors.com

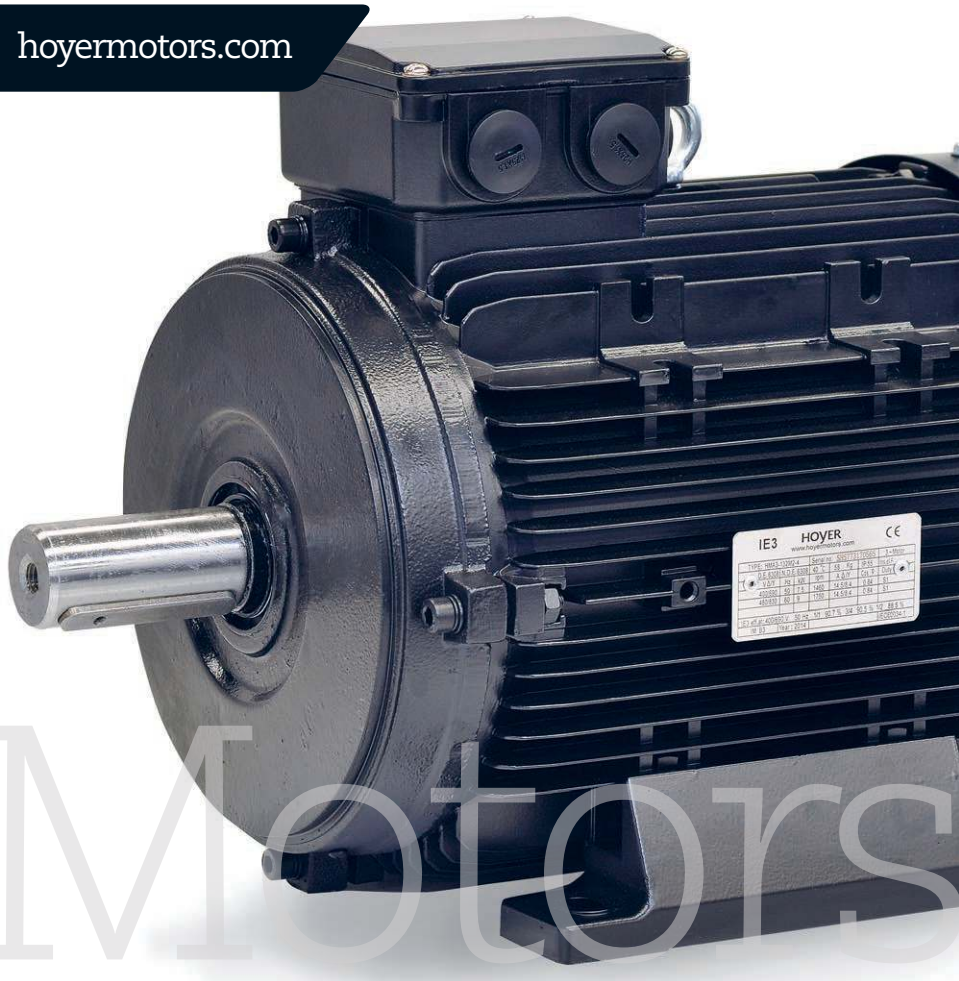

IE3 Motors

HOYER
MOTORS

Behind Hoyer Motors

HOYER

EXCEEDING EXPECTATIONS

Hoyer Motors is an international supplier of high-end electric motors. Headquartered in Denmark and China, we are represented through sales offices and distributors worldwide. We pride ourselves of being an elite manufacturing enterprise with the highest attention to service and flexibility – a company where dedication, competitiveness and reliability are second to none.

We have a selected focus on the segments Marine, Water, HVAC, HPU, Oil & Gas and Wind. Through strong partnerships with market leading industrial OEM's within these segments, we are able to offer a unique setup and industrial insight. We add value by understanding the business and markets of our customers.

At Hoyer Motors, meeting agreements is as natural as breathing air. We believe in trustworthy partnerships with our customers and always meet our obligations on deliveries, documentation and product quality. This is what we mean by Exceeding Expectations.

General information about Hoyer IE3 electric motors

Hoyer IE3 electric motors are manufactured according to international standards under IEC 60034-30 and are fulfilling the requirement of the EC Directive 2009/125 (ecodesign for energy-related products).

Hoyer motors are installed in many different fields all over the world, and with a proven quality, high reliability and performance, Hoyer IE3 is the electric motor for the future.

Technical information

Totally enclosed squirrel cage, TEFC, three phase motors type HMA3 (aluminum) in size 56 to 132 (size 160 and 180 on request) and type HMC3 (cast iron) in size 160 to 400 (below size 160 and bigger than size 400 on request).

Rotor is casted with 100% pure aluminum and shaft is made of high quality C45 steel.

All cast iron and aluminum motors are provided with SKF or similar premium quality bearings. All sizes have fixed bearing in drive-end as standard. Motors size ≤ 180 are with closed bearings greased for life.

Stator winding is made with double coated copper wire and phase to phase insulation. The insulation system is Class F, maximum 105K temperature rise at 40°C ambient temperature.

Class H insulation system can be delivered on request.

All motors are manufactured according to IEC 60034, IEC60072, EN50347 and tested according to IEC60034-2-1.

Rotor is dynamically balanced with half key to fullfill vibration level IEC60034-14 grade A.
Sound level within limits of IEC60034-9.

Standard voltages:
400V Y – Hoyer IE3 Motors ≤ 3kW
400V D – Hoyer IE3 Motors > 3kW
Other voltages can be supplied on request.

All Hoyer IE3 motors are with PTC terminal protection. Motors can be modified with bimetal detector, heating elements for stand still protection and PT100 for both winding and bearings on request.

All Hoyer IE3 Motors are as standard IP55, prepared for drain holes. Higher protection class on request.
All motors are delivered with blind caps in the terminal box.

Motor size ≥100 are supplied with eyebolts for lifting.

Hoyer IE3 motors are painted black RAL 9005 with low gloss for use in normal industrial environments.

Application information

Hoyer IE3 electric motors are used within a wide variety of applications. Some of the typical applications are listed below:

- Fans (air handling units, refrigeration plants, oil coolers)
- Hydraulic power packs
- Pumps (for water, fuel, oil)
- Shredders (granulation, crushing)
- Gears (gear reducers, gearmotors)

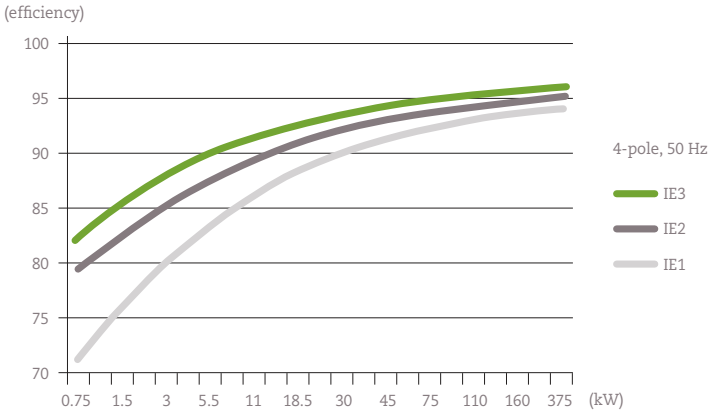

IE3 / 2 pol

Motor type	Power	Speed	Current at 400V		Efficiency (%)			Pf	Torque			IM	Weight
	kw	rpm	I_N (A)	I_S/I_N	1/1 load	3/4 load	1/2 load	cos φ	T_N	T_S/T_N	T_M/T_N	J(kgm²)	kg
Aluminium motors													
HMA3 80 1-2	0,75	2910	1,72	8,35	82,1	82,4	80,3	0,77	2,48	2,95	3,30	0,00099	10,0
HMA3 80 2-2	1,10	2910	2,42	8,60	83,5	84,1	82,7	0,80	3,65	3,40	3,60	0,00134	12,0
HMA3 90S-2	1,50	2920	3,15	9,05	84,9	85,3	83,9	0,82	4,90	2,80	3,00	0,00224	15,0
HMA3 90L-2	2,20	2920	4,45	9,10	86,3	87,3	86,6	0,84	7,20	3,25	3,50	0,00278	19,0
HMA3 100L-2	3,00	2910	5,75	9,25	87,4	87,9	86,8	0,87	9,85	3,45	3,60	0,00444	25,0
HMA3 112M-2	4,00	2910	7,20	8,70	88,4	88,9	87,9	0,92	13,2	2,60	3,00	0,00701	34,0
HMA3 132S1-2	5,50	2930	9,95	9,05	89,3	89,2	87,6	0,90	18,0	2,48	2,80	0,01410	48,0
HMA3 132S2-2	7,50	2930	13,8	9,25	90,2	90,3	89,1	0,88	24,4	2,80	3,00	0,01688	55,0
Cast iron motors													
HMC3 160M1-2	11,0	2950	19,6	8,95	91,2	91,3	90,1	0,90	35,5	2,50	3,50	0,05620	123
HMC3 160M2-2	15,0	2950	26,0	9,95	92,0	92,0	90,9	0,91	48,5	2,95	3,90	0,06610	140
HMC3 160L-2	18,5	2960	32,0	10,6	92,5	92,5	91,4	0,91	60,0	3,20	4,30	0,08330	159
HMC3 180M-2	22,0	2960	38,5	10,0	92,8	92,5	91,0	0,90	71,0	4,10	4,10	0,13050	204
HMC3 200L1-2	30,0	2970	51,0	8,55	94,3	94,5	93,0	0,91	96,5	2,90	3,05	0,18260	247
HMC3 200L2-2	37,0	2970	63,0	9,05	93,7	93,7	92,8	0,91	118	3,65	3,65	0,21540	266
HMC3 225M-2	45,0	2970	76,5	8,70	94,0	93,9	92,9	0,91	144	3,25	3,45	0,34250	336
HMC3 250M-2	55,0	2980	95,0	10,8	94,3	94,0	92,6	0,90	176	3,40	3,95	0,46120	408
HMC3 280S-2	75,0	2980	130	7,40	94,9	94,7	92,7	0,90	240	2,40	3,25	0,76090	604
HMC3 280M-2	90,0	2980	154	8,05	95,1	95,1	93,6	0,91	290	2,80	2,75	0,89040	637
HMC3 315S-2	110	2980	182	7,40	95,7	95,9	94,6	0,93	355	2,10	2,80	1,70570	914
HMC3 315M-2	132	2970	218	7,00	95,5	95,8	95,1	0,93	425	2,02	2,70	1,92280	1012
HMC3 315L1-2	160	2970	265	6,50	95,6	96,2	95,8	0,94	515	1,88	2,70	2,10890	1046
HMC3 315L2-2	200	2980	335	8,60	96,0	96,1	94,7	0,92	640	2,08	2,80	2,60510	1147
HMC3 355M-2	250	2980	425	6,70	95,8	96,0	95,6	0,90	800	1,72	2,30	3,58980	1717
HMC3 355L1-2	315	2980	530	6,60	95,8	96,2	96,1	0,91	1000	1,68	2,30	4,20270	1830

Data at 400V 50Hz
At 230V 50Hz the current is √3 x current at 400V and at 690V the current is current at 400V / √3. All other data are identical.

IE3 / 4 pol

Motor type	Power	Speed	Current at 400V		Efficiency (%)			Pf	Torque			IM	Weight
	kw	rpm	I_N (A)	I_S/I_N	1/1 load	3/4 load	1/2 load	cos φ	T_N	T_S/T_N	T_M/T_N	J(kgm²)	kg
Aluminium motors													
HMA3 80 2-4	0,75	1440	1,80	6,65	82,5	82,9	81,0	0,73	4,95	2,95	3,30	0,00265	12,0
HMA3 90S-4	1,10	1450	2,50	8,05	84,2	84,0	81,4	0,76	7,25	2,85	3,00	0,00372	17,0
HMA3 90L-4	1,50	1450	3,45	8,2	85,3	85,0	82,5	0,74	9,85	2,85	3,00	0,00486	22,0
HMA3 100L1-4	2,20	1460	4,60	8,15	86,8	87,0	85,4	0,80	14,4	3,00	3,30	0,00934	27,0
HMA3 100L2-4	3,00	1460	6,20	9,05	87,7	87,9	86,4	0,80	19,6	3,50	3,80	0,01153	33,0
HMA3 112M-4	4,00	1460	7,90	9,35	89,2	89,7	88,8	0,83	26,0	3,10	3,30	0,01625	41,0
HMA3 132S-4	5,50	1460	10,8	8,75	89,7	90,0	89,0	0,82	36,0	2,80	3,00	0,03446	53,0
HMA3 132M-4	7,50	1460	14,2	8,8	90,5	91,2	90,9	0,85	49,0	2,90	3,00	0,04368	62,0
Cast iron motors													
HMC3 160M-4	11,0	1470	21,2	8,2	91,6	92,1	90,1	0,83	71,5	2,90	3,65	0,10550	131
HMC3 160L-4	15,0	1470	28,5	9,05	92,1	92,4	91,8	0,83	97,0	3,15	3,40	0,13430	151
HMC3 180M-4	18,5	1470	33,5	8,15	92,7	93,3	91,9	0,88	120	2,65	3,45	0,18730	189
HMC3 180L-4	22,0	1470	39,5	8,6	93,2	93,9	92,6	0,88	142	2,80	3,55	0,23410	215
HMC3 200L-4	30,0	1480	54,0	8,2	93,6	93,8	93,0	0,87	194	2,90	3,25	0,40950	290
HMC3 225S-4	37,0	1480	66,5	7,9	93,9	94,3	93,8	0,86	238	3,05	3,30	0,60700	326
HMC3 225M-4	45,0	1480	79,5	7,5	94,1	94,6	93,6	0,88	290	2,60	2,85	0,68980	350
HMC3 250M-4	55,0	1480	96,5	8,5	94,7	95,1	93,8	0,88	355	3,00	3,10	1,01480	486
HMC3 280S-4	75,0	1490	132	7,25	95,5	95,5	94,1	0,88	480	2,28	2,80	1,73680	594
HMC3 280M-4	90,0	1490	154	8	95,4	95,8	94,8	0,90	580	2,55	2,80	2,10890	694
HMC3 315S-4	110	1490	188	8,25	95,7	95,8	94,4	0,90	705	2,60	2,70	3,33250	912
HMC3 315M-4	132	1490	222	8,1	95,8	95,9	94,4	0,91	845	2,50	2,80	3,90700	1032
HMC3 315L1-4	160	1490	265	7,8	96,1	96,3	95,3	0,92	1020	2,26	2,70	4,59650	1115
HMC3 315L2-4	200	1490	330	7,25	96,3	96,6	95,7	0,93	1280	2,08	2,50	5,74560	1253
HMC3 355M-4	250	1490	425	6,45	96,2	96,3	95,8	0,90	1600	1,86	2,30	9,40970	1793
HMC3 355L-4	315	1490	535	7,5	96,1	96,2	95,6	0,90	2020	2,30	2,50	10,7819	1853

Data at 400V 50Hz
At 230V 50Hz the current is √3 x current at 400V and at 690V the current is current at 400V / √3. All other data are identical.

IE3 / 6 pol

Motor type	Power	Speed	Current at 400V		Efficiency (%)			Pf	Torque			IM	Weight
	kw	rpm	I_N (A)	I_S/I_N	1/1 load	3/4 load	1/2 load	cos φ	T_N	T_S/T_N	T_M/T_N	J(kgm²)	kg
Aluminium motors													
HMA3 90S-6	0,75	960	2,14	5,70	79,0	78,4	74,7	0,68	7,45	2,28	2,50	0,00481	16,0
HMA3 90L-6	1,10	960	2,90	6,05	81,0	80,3	76,8	0,68	11,0	2,60	3,00	0,00683	21,0
HMA3 100L-6	1,50	960	3,85	5,90	82,6	82,5	79,9	0,69	14,8	2,55	2,80	0,01249	25,0
HMA3 112M-6	2,20	970	5,70	5,95	84,5	84,3	81,9	0,67	21,8	2,24	3,00	0,01701	35,0
HMA3 132S-6	3,00	980	6,90	7,60	85,9	85,3	82,6	0,74	29,5	2,10	2,20	0,03683	45,0
HMA3 132M1-6	4,00	970	8,85	7,60	86,9	86,8	84,9	0,76	39,0	2,14	2,20	0,04843	53,0
HMA3 132M2-6	5,50	970	12,0	8,35	88,0	88,0	86,4	0,76	54,0	2,44	2,46	0,06322	62,0
Cast iron motors													
HMC3 160M-6	7,50	970	15,2	5,85	89,5	90,5	88,6	0,82	73,5	1,98	2,16	0,12460	120
HMC3 160L-6	11,0	970	21,4	6,10	90,4	91,3	91,2	0,83	108	2,00	2,50	0,16080	145
HMC3 180L-6	15,0	980	29,0	7,75	91,2	91,6	90,9	0,82	146	2,10	2,60	0,28400	195
HMC3 200L1-6	18,5	980	37,5	6,50	92,2	92,2	89,6	0,78	180	2,08	2,60	0,41790	235
HMC3 200L2-6	22,0	980	44,5	6,95	92,5	92,6	90,2	0,79	214	2,04	2,55	0,48220	252
HMC3 225M-6	30,0	990	59,0	6,10	93,1	93,6	92,2	0,81	290	2,04	2,30	0,68240	300
HMC3 250M-6	37,0	980	67,0	6,95	93,4	93,8	92,1	0,87	360	2,34	2,36	1,16200	428
HMC3 280S-6	45,0	990	83,5	6,70	93,9	94,0	92,0	0,84	435	2,24	2,30	1,87950	528
HMC3 280M-6	55,0	990	100	6,45	94,1	94,3	92,6	0,86	530	2,04	2,30	2,26400	590
HMC3 315S-6	75,0	990	134	5,80	94,6	95,1	94,1	0,87	725	2,00	2,30	4,24010	900
HMC3 315M-6	90,0	990	158	5,70	95,0	95,6	94,9	0,88	870	1,86	2,20	4,61870	1008
HMC3 315L1-6	110	990	196	6,95	95,1	95,4	94,0	0,87	1060	2,36	2,60	5,90590	1100
HMC3 315L2-6	132	990	232	6,75	95,1	95,6	94,7	0,88	1280	2,20	2,40	7,11730	1189
HMC3 355M1-6	160	990	280	5,50	94,7	95,2	94,3	0,89	1540	2,00	2,20	9,92910	1635
HMC3 355M2-6	200	990	345	6,05	94,6	95,1	94,3	0,89	1940	2,00	2,20	12,2582	1790
HMC3 355L-6	250	990	425	5,30	95,0	95,7	95,3	0,90	2420	2,00	2,20	15,9356	2100

Data at 400V 50Hz
At 230V 50Hz the current is √3 x current at 400V and at 690V the current is current at 400V / √3. All other data are identical.

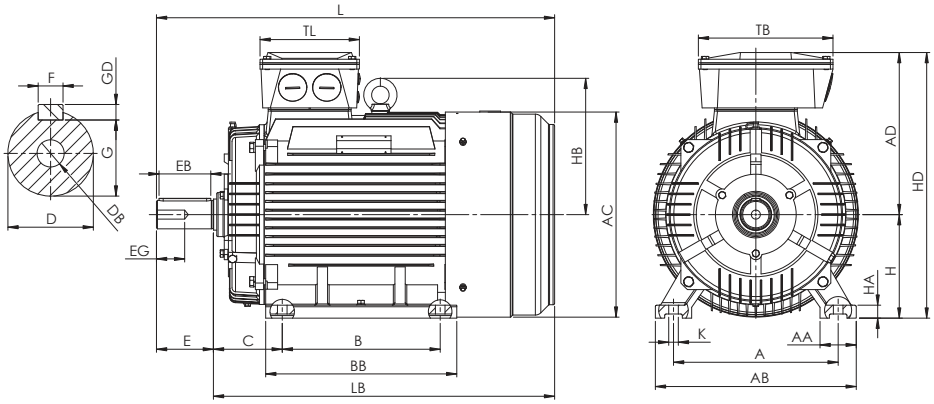

Motor type	Pole	A	AA	AB	AC	AD	B	BB	C	D	DB	E	EB	EG	F	G	GD	H	HA	HB	HD	K	L	LB	TB	TL
Aluminium motors																										
HMA3 80	All	125	27	160	159	126	100	122	50	19	M6	40	32	16	6	15,5	6	80	12	-	206	10	298	258	100	100
HMA3 90S	All	140	35	177	175	132	100	155	56	24	M8	50	40	24	8	20	7	90	13	-	222	10	328	278	100	100
HMA3 90L	2	140	35	177	175	132	125	155	56	24	M8	50	40	24	8	20	7	90	13	-	222	10	362	312	100	100
HMA3 90L	4,6	140	35	177	175	132	125	155	56	24	M8	50	40	24	8	20	7	90	13	-	222	10	362	312	100	100
HMA3 100L	All	160	42	205	198	147	140	176	63	28	M10	60	50	28	8	24	7	100	12	135	247	12	406	346	100	100
HMA3 112M	2,6	190	45	222	219	168	140	180	70	28	M10	60	50	28	8	24	7	112	13	145	280	12	390	330	120	120
HMA3 112M	4	190	45	222	219	168	140	180	70	28	M10	60	50	28	8	24	7	112	13	145	280	12	430	370	120	120
HMA3 132S	All	216	50	256	258	187	140	180	89	38	M12	80	70	30	10	33	8	132	16,5	165	319	12	463	383	120	120
HMA3 132M	2	216	50	256	258	187	178	218	89	38	M12	80	70	30	10	33	8	132	16,5	165	319	12	501	421	120	120
HMA3 132M	4,6	216	50	256	258	187	178	218	89	38	M12	80	70	30	10	33	8	132	16,5	165	319	12	501	421	120	120

IE3 / B3

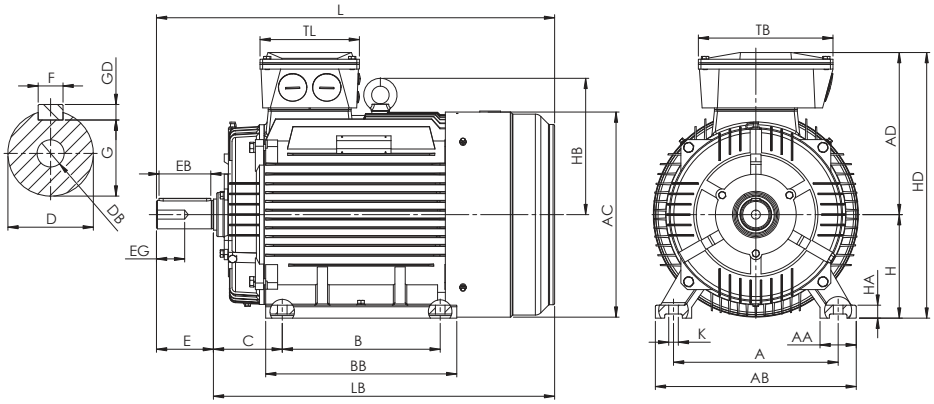

Motor type	Pole	A	AA	AB	AC	AD	B	BB	C	D	DB	E	EB	EG	F	G	GD	H	HA	HB	HD	K	L	LB	TB	TL
Cast iron motors																										
HMC3 160M	All	254	65	314	313	276	210	260	108	42	M16	110	100	36	12	37	8	160	20	221	436	14,5	610	500	218	162
HMC3 160L	All	254	65	314	313	276	254	304	108	42	M16	110	100	36	12	37	8	160	20	221	436	14,5	654	544	218	162
HMC3 180M	All	279	70	349	354	292	241	311	121	48	M16	110	100	40	14	42,5	9	180	22	237	472	14,5	686	576	218	162
HMC3 180L	All	279	70	349	354	292	279	349	121	48	M16	110	100	40	14	42,5	9	180	22	237	472	14,5	724	614	218	162
HMC3 200L	All	318	70	388	396	313	305	369	133	55	M20	110	100	50	16	49	10	200	25	264	513	18,5	769	659	260	192
HMC3 225S	4,6	356	75	431	445	336	286	369	149	60	M20	140	130	56	18	53	11	225	28	285	561	18,5	823	683	260	192
HMC3 225M	2	356	75	431	445	336	311	393	149	55	M20	110	100	56	16	49	10	225	28	285	561	18,5	818	708	260	192
HMC3 225M	4,6	356	75	431	445	336	311	393	149	60	M20	140	130	56	18	53	11	225	28	285	561	18,5	848	708	260	192
HMC3 250M	2	406	80	484	484	374	349	445	168	60	M20	140	130	56	18	53	11	250	30	316	624	24	909	769	305	230
HMC3 250M	4,6	406	80	484	484	374	349	445	168	65	M20	140	130	56	18	58	11	250	30	316	624	24	909	769	305	230
HMC3 280S	2	457	85	542	546	403	368	485	190	65	M20	140	130	56	18	58	11	280	35	361	683	24	959	819	305	230
HMC3 280S	4,6	457	85	542	546	403	368	485	190	75	M20	140	130	56	20	67,5	12	280	35	361	683	24	979	839	305	230
HMC3 280M	2	457	85	542	546	403	419	536	190	65	M20	140	130	56	18	58	11	280	35	361	683	24	1010	870	305	230
HMC3 280M	4,6	457	85	542	546	403	419	536	190	75	M20	140	130	56	20	67,5	12	280	35	361	683	24	1030	890	305	230
HMC3 315S	2	508	120	628	618	546	406	570	216	65	M20	140	130	56	18	58	11	315	45	430	862	28	1193	1053	400	280
HMC3 315S	4,6	508	120	628	618	547	406	570	216	80	M20	170	160	56	22	71	14	315	45	430	862	28	1223	1053	400	280
HMC3 315M	2	508	120	628	618	546	457	680	216	65	M20	140	130	56	18	58	11	315	45	430	861	28	1303	1163	400	280
HMC3 315M	4,6	508	120	628	618	546	457	680	216	80	M20	170	160	56	22	71	14	315	45	430	861	28	1333	1163	400	280
HMC3 315L1	2	508	120	628	618	546	508	680	216	65	M20	140	130	56	18	58	11	315	45	430	861	28	1303	1163	400	280
HMC3 315L1	4,6	508	120	628	618	546	508	680	216	80	M20	170	160	56	22	71	14	315	45	430	861	28	1333	1163	400	280
HMC3 315L2	2	508	120	628	618	546	508	680	216	65	M20	140	130	56	18	58	11	315	45	430	861	28	1303	1163	400	280
HMC3 315L2	4,6	508	120	628	618	546	508	680	216	80	M20	170	160	56	22	71	14	315	45	430	861	28	1333	1163	400	280
HMC3 355M	2	610	116	726	699	664	560	750	254	75	M24	140	130	56	20	67,5	12	355	52	489,5	1019	28	1507	1367	460	330
HMC3 355M	4,6	610	116	726	699	664	560	750	254	95	M24	170	160	56	25	86	14	355	52	489,5	1019	28	1537	1367	460	330
HMC3 355L	2	610	116	726	699	664	630	750	254	75	M24	140	130	56	20	67,5	12	355	52	489,5	1019	28	1507	1367	460	330
HMC3 355L	4,6	610	116	726	699	664	630	750	254	95	M24	170	160	56	25	86	14	355	52	489,5	1019	28	1537	1367	460	330

IE3 / B5

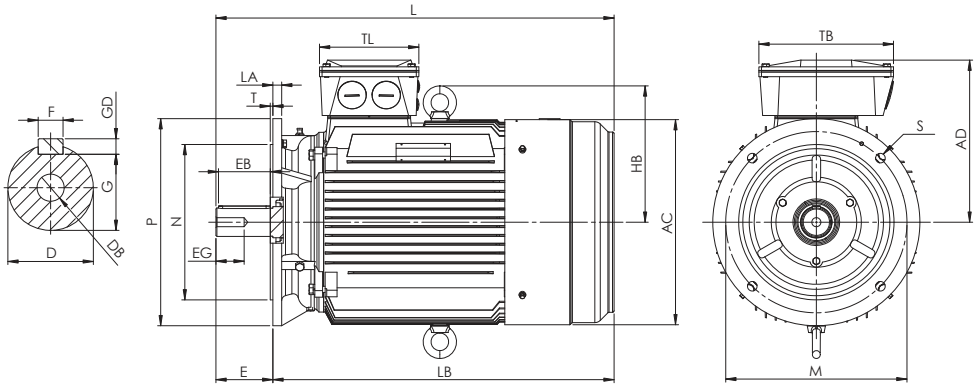

Motor type	Pole	AC	AD	L	LB	HB	TL	TB	D	E	F	G	GD	EB	EG	DB	M	N	P	S	T	LA
Aluminium motors																						
HMA3 80	All	159	126	298	258	-	100	100	19	40	6	15,5	6	32	16	M6	165	130	200	4-Ø12	3,5	10
HMA3 90S	All	175	132	328	278	-	100	100	24	50	8	20	7	40	24	M8	165	130	200	4-Ø12	3,5	10
HMA3 90L	2	175	132	362	312	-	100	100	24	50	8	20	7	40	24	M8	165	130	200	4-Ø12	3,5	10
HMA3 90L	4,6	175	132	362	312	-	100	100	24	50	8	20	7	40	24	M8	165	130	200	4-Ø12	3,5	10
HMA3 100L	All	198	147	406	346	135	100	100	28	60	8	24	7	50	28	M10	215	180	250	4-Ø14,5	4	14
HMA3 112M	2,6	219	168	390	330	145	120	120	28	60	8	24	7	50	28	M10	215	180	250	4-Ø14,5	4	14
HMA3 112M	4	219	168	430	370	145	120	120	28	60	8	24	7	50	28	M10	215	180	250	4-Ø14,5	4	14
HMA3 132S	All	258	187	463	383	165	120	120	38	80	10	33	8	70	30	M12	265	230	300	4-Ø14,5	4	15
HMA3 132M	2	258	187	501	421	165	120	120	38	80	10	33	8	70	30	M12	265	230	300	4-Ø14,5	4	15
HMA3 132M	4,6	258	187	501	421	165	120	120	38	80	10	33	8	70	30	M12	265	230	300	4-Ø14,5	4	15

IE3 / B5

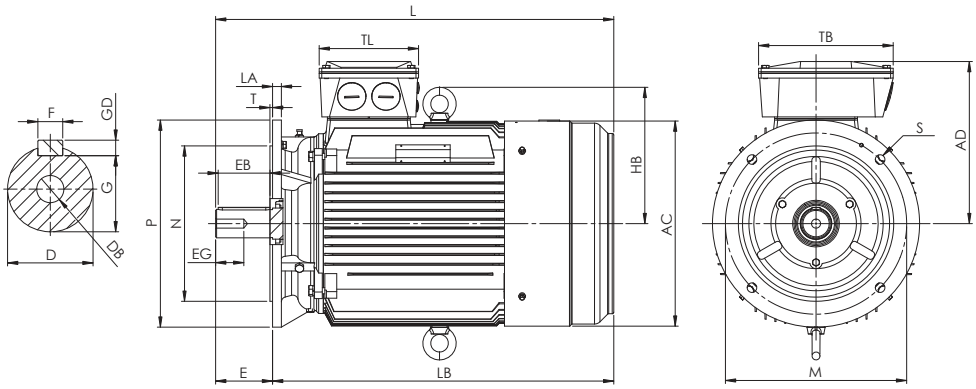

Motor type	Pole	AC	AD	L	LB	HB	TL	TB	D	E	F	G	GD	EB	EG	DB	M	N	P	S	T	LA
Cast iron motors																						
HMC3 160M	All	313	276	610	500	221	162	218	42	110	12	37	8	100	36	M16	300	250	350	4-Ø18,5	5	14
HMC3 160L	All	313	276	654	544	221	162	218	42	110	12	37	8	100	36	M16	300	250	350	4-Ø18,5	5	14
HMC3 180M	All	354	292	686	576	237	162	218	48	110	14	42,5	9	100	40	M16	300	250	350	4-Ø18,5	5	15
HMC3 180L	All	354	292	724	614	237	162	218	48	110	14	42,5	9	100	40	M16	300	250	350	4-Ø18,5	5	15
HMC3 200L	All	396	313	769	659	264	192	260	55	110	16	49	10	100	50	M20	350	300	400	4-Ø18,5	5	17
HMC3 225S	4,6	445	336	823	683	285	192	260	60	140	18	53	11	130	56	M20	400	350	450	8-Ø18,5	5	20
HMC3 225M	2	445	336	818	708	285	192	260	55	110	16	49	10	100	56	M20	400	350	450	8-Ø18,5	5	20
HMC3 225M	4,6	445	336	848	708	285	192	260	60	140	18	53	11	130	56	M20	400	350	450	8-Ø18,5	5	20
HMC3 250M	2	484	374	909	769	316	230	305	60	140	18	53	11	130	56	M20	500	450	550	8-Ø18,5	5	22
HMC3 250M	4,6	484	374	909	769	316	230	305	65	140	18	58	11	130	56	M20	500	450	550	8-Ø18,5	5	22
HMC3 280S	2	546	403	959	819	361	230	305	65	140	18	58	11	130	56	M20	500	450	550	8-Ø18,5	5	22
HMC3 280S	4,6	546	403	979	839	361	230	305	75	140	20	67,5	12	130	56	M20	500	450	550	8-Ø18,5	5	22
HMC3 280M	2	546	403	1010	870	361	230	305	65	140	18	58	11	130	56	M20	500	450	550	8-Ø18,5	5	22
HMC3 280M	4,6	546	403	1030	890	361	230	305	75	140	20	67,5	12	130	56	M20	500	450	550	8-Ø18,5	5	22
HMC3 315S	2	618	546	1193	1053	430	280	400	65	140	18	58	11	130	56	M20	600	550	660	8-Ø24	6	22
HMC3 315S	4,6	618	547	1223	1053	430	280	400	80	170	22	71	14	160	56	M20	600	550	660	8-Ø24	6	22
HMC3 315M	2	618	546	1303	1163	430	280	400	65	140	18	58	11	130	56	M20	600	550	660	8-Ø24	6	22
HMC3 315M	4,6	618	546	1333	1163	430	280	400	80	170	22	71	14	160	56	M20	600	550	660	8-Ø24	6	22
HMC3 315L1	2	618	546	1303	1163	430	280	400	65	140	18	58	11	130	56	M20	600	550	660	8-Ø24	6	22
HMC3 315L1	4,6	618	546	1333	1163	430	280	400	80	170	22	71	14	160	56	M20	600	550	660	8-Ø24	6	22
HMC3 315L2	2	618	546	1303	1163	430	280	400	65	140	18	58	11	130	56	M20	600	550	660	8-Ø24	6	22
HMC3 315L2	4,6	618	546	1333	1163	430	280	400	80	170	22	71	14	160	56	M20	600	550	660	8-Ø24	6	22
HMC3 355M	2	699	664	1507	1367	489,5	330	460	75	140	20	67,5	12	130	56	M24	740	680	800	8-Ø24	6	25
HMC3 355M	4,6	699	664	1537	1367	489,5	330	460	95	170	25	86	14	160	56	M24	740	680	800	8-Ø24	6	25
HMC3 355L	2	699	664	1507	1367	489,5	330	460	75	140	20	67,5	12	130	56	M24	740	680	800	8-Ø24	6	25
HMC3 355L	4,6	699	664	1537	1367	489,5	330	460	95	170	25	86	14	160	56	M24	740	680	800	8-Ø24	6	25

IE3 / B14

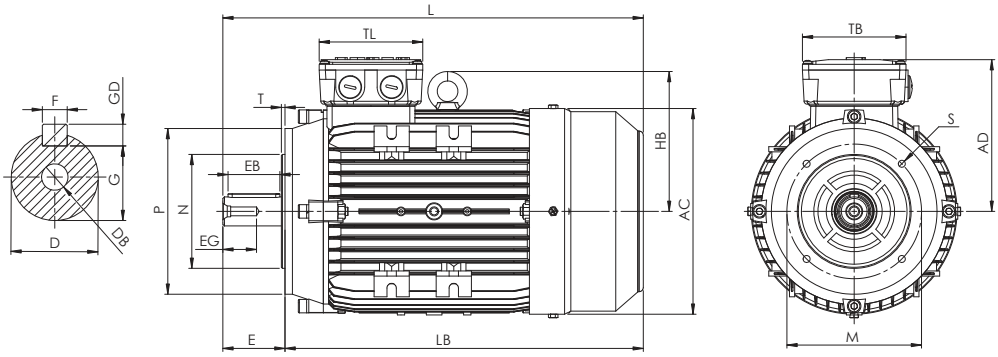

														B14 flange					B14 big flange						
Motor type	Pole	AC	AD	D	DB	E	EB	EG	F	G	GD	L	LB	M	N	P	S	T	M	N	P	S	T	TB	TL
Aluminium motors																									
HMA3 80	All	159	126	19	M6	40	32	16	6	15,5	6	298	258	100	80	120	4-M6	3	130	110	160	4-M8	3,5	100	100
HMA3 90S	All	175	132	24	M8	50	40	24	8	20	7	328	278	115	95	140	4-M8	3	130	110	160	4-M8	3,5	100	100
HMA3 90L	2	175	132	24	M8	50	40	24	8	20	7	362	312	115	95	140	4-M8	3	130	110	160	4-M8	3,5	100	100
HMA3 90L	4,6	175	132	24	M8	50	40	24	8	20	7	362	312	115	95	140	4-M8	3	130	110	160	4-M8	3,5	100	100
HMA3 100L	All	198	147	28	M10	60	50	28	8	24	7	406	346	130	110	160	4-M8	3,5	165	130	200	4-M10	3,5	100	100
HMA3 112M	2,6	219	168	28	M10	60	50	28	8	24	7	390	330	130	110	160	4-M8	3,5	165	130	200	4-M10	3,5	120	120
HMA3 112M	4	219	168	28	M10	60	50	28	8	24	7	430	370	130	110	160	4-M8	3,5	165	130	200	4-M10	3,5	120	120
HMA3 132S	All	258	187	38	M12	80	70	30	10	33	8	463	383	165	130	200	4-M10	3,5	215	180	250	4-M12	4	120	120
HMA3 132M	2	258	187	38	M12	80	70	30	10	33	8	501	421	165	130	200	4-M10	3,5	215	180	250	4-M12	4	120	120
HMA3 132M	4,6	258	187	38	M12	80	70	30	10	33	8	501	421	165	130	200	4-M10	3,5	215	180	250	4-M12	4	120	120

IE3 / B34

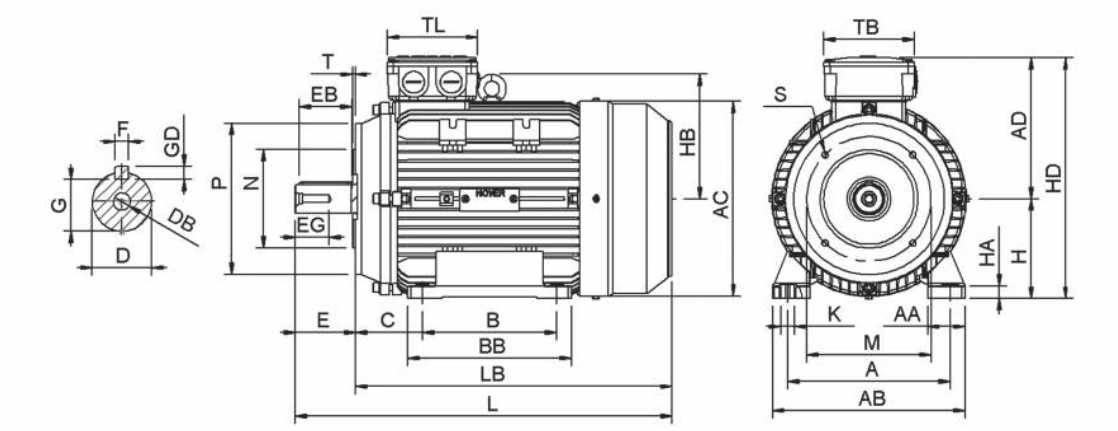

																								B14 flange					B14 big flange						
Motor type	Pole	A	AA	AB	AC	AD	B	BB	C	D	DB	E	EB	EG	F	G	GD	H	HA	HD	K	L	LB	M	N	P	S	T	M	N	P	S	T	TB	TL
Aluminium motors																																			
HMA3 80	All	125	27	160	159	126	100	122	50	19	M6	40	32	16	6	15,5	6	80	12	206	10	298	258	100	80	120	4-M6	3	130	110	160	4-M8	3,5	100	100
HMA3 90S	All	140	35	177	175	132	100	155	56	24	M8	50	40	24	8	20	7	90	13	222	10	328	278	115	95	140	4-M8	3	130	110	160	4-M8	3,5	100	100
HMA3 90L	2	140	35	177	175	132	125	155	56	24	M8	50	40	24	8	20	7	90	13	222	10	362	312	115	95	140	4-M8	3	130	110	160	4-M8	3,5	100	100
HMA3 90L	4,6	140	35	177	175	132	125	155	56	24	M8	50	40	24	8	20	7	90	13	222	10	362	312	115	95	140	4-M8	3	130	110	160	4-M8	3,5	100	100
HMA3 100L	All	160	42	205	198	147	140	176	63	28	M10	60	50	28	8	24	7	100	12	247	12	406	346	130	110	160	4-M8	3,5	165	130	200	4-M10	3,5	100	100
HMA3 112M	2,6	190	45	222	219	168	140	180	70	28	M10	60	50	28	8	24	7	112	13	280	12	390	330	130	110	160	4-M8	3,5	165	130	200	4-M10	3,5	120	120
HMA3 112M	4	190	45	222	219	168	140	180	70	28	M10	60	50	28	8	24	7	112	13	280	12	430	370	130	110	160	4-M8	3,5	165	130	200	4-M10	3,5	120	120
HMA3 132S	All	216	50	256	258	187	140	180	89	38	M12	80	70	30	10	33	8	132	16,5	319	12	463	383	165	130	200	4-M10	3,5	215	180	250	4-M12	4	120	120
HMA3 132M	2	216	50	256	258	187	178	218	89	38	M12	80	70	30	10	33	8	132	16,5	319	12	501	421	165	130	200	4-M10	3,5	215	180	250	4-M12	4	120	120
HMA3 132M	4,6	216	50	256	258	187	178	218	89	38	M12	80	70	30	10	33	8	132	16,5	319	12	501	421	165	130	200	4-M10	3,5	215	180	250	4-M12	4	120	120

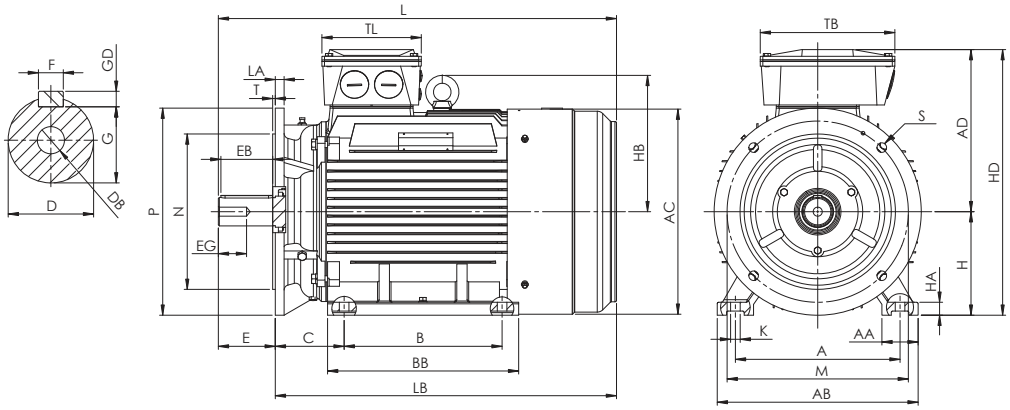

Motor type	Pole	A	AA	AB	AC	AD	B	BB	C	D	DB	E	EB	EG	F	G	GD	H	HA	HB	HD	K	L	LA	LB	M	N	P	S	T	TB	TL
Aluminium motors																																
HMA3 80	All	125	27	160	159	126	100	122	50	19	M6	40	32	16	6	15,5	6	80	12	-	206	10	298	10	258	165	130	200	4-Ø12	3,5	100	100
HMA3 90S	All	140	35	177	175	132	100	155	56	24	M8	50	40	24	8	20	7	90	13	-	222	10	328	10	278	165	130	200	4-Ø12	3,5	100	100
HMA3 90L	2	140	35	177	175	132	125	155	56	24	M8	50	40	24	8	20	7	90	13	-	222	10	362	10	312	165	130	200	4-Ø12	3,5	100	100
HMA3 90L	4,6	140	35	177	175	132	125	155	56	24	M8	50	40	24	8	20	7	90	13	-	222	10	362	10	312	165	130	200	4-Ø12	3,5	100	100
HMA3 100L	All	160	42	205	198	147	140	176	63	28	M10	60	50	28	8	24	7	100	12	135	247	12	406	14	346	215	180	250	4-Ø14,5	4	100	100
HMA3 112M	2,6	190	45	222	219	168	140	180	70	28	M10	60	50	28	8	24	7	112	13	145	280	12	390	14	330	215	180	250	4-Ø14,5	4	120	120
HMA3 112M	4	190	45	222	219	168	140	180	70	28	M10	60	50	28	8	24	7	112	13	145	280	12	430	14	370	215	180	250	4-Ø14,5	4	120	120
HMA3 132S	All	216	50	256	258	187	140	180	89	38	M12	80	70	30	10	33	8	132	16,5	165	319	12	463	15	383	265	230	300	4-Ø14,5	4	120	120
HMA3 132M	2	216	50	256	258	187	178	218	89	38	M12	80	70	30	10	33	8	132	16,5	165	319	12	501	15	421	265	230	300	4-Ø14,5	4	120	120
HMA3 132M	4,6	216	50	256	258	187	178	218	89	38	M12	80	70	30	10	33	8	132	16,5	165	319	12	501	15	421	265	230	300	4-Ø14,5	4	120	120

IE3 / B35

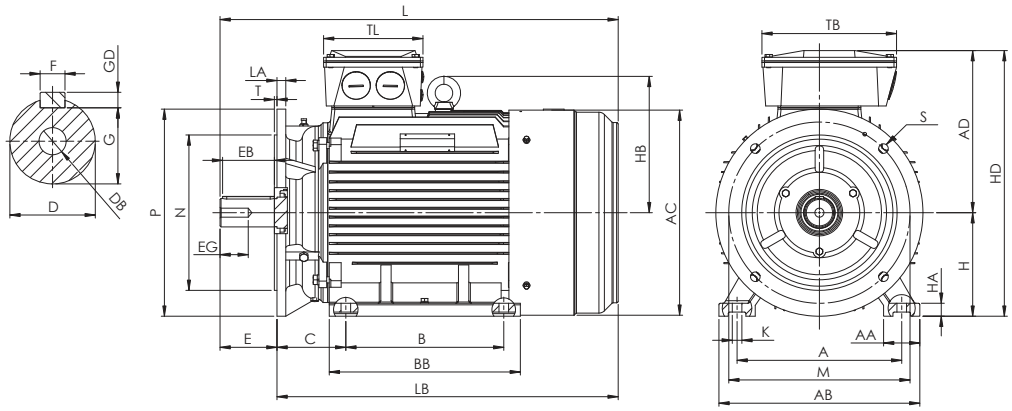

Motor type	Pole	A	AA	AB	AC	AD	B	BB	C	D	DB	E	EB	EG	F	G	GD	H	HA	HB	HD	K	L	LA	LB	M	N	P	S	T	TB	TL
Cast iron motors																																
HMC3 160M	All	254	65	314	313	276	210	260	108	42	M16	110	100	36	12	37	8	160	20	221	436	14,5	610	14	500	300	250	350	4-Ø18,5	5	218	162
HMC3 160L	All	254	65	314	313	276	254	304	108	42	M16	110	100	36	12	37	8	160	20	221	436	14,5	654	14	544	300	250	350	4-Ø18,5	5	218	162
HMC3 180M	All	279	70	349	354	292	241	311	121	48	M16	110	100	40	14	42,5	9	180	22	237	472	14,5	686	15	576	300	250	350	4-Ø18,5	5	218	162
HMC3 180L	All	279	70	349	354	292	279	349	121	48	M16	110	100	40	14	42,5	9	180	22	237	472	14,5	724	15	614	300	250	350	4-Ø18,5	5	218	162
HMC3 200L	All	318	70	388	396	313	305	369	133	55	M20	110	100	50	16	49	10	200	25	264	513	18,5	769	17	659	350	300	400	4-Ø18,5	5	260	192
HMC3 225S	4,6	356	75	431	445	336	286	369	149	60	M20	140	130	56	18	53	11	225	28	285	561	18,5	823	20	683	400	350	450	8-Ø18,5	5	260	192
HMC3 225M	2	356	75	431	445	336	311	393	149	55	M20	110	100	56	16	49	10	225	28	285	561	18,5	818	20	708	400	350	450	8-Ø18,5	5	260	192
HMC3 225M	4,6	356	75	431	445	336	311	393	149	60	M20	140	130	56	18	53	11	225	28	285	561	18,5	848	20	708	400	350	450	8-Ø18,5	5	260	192
HMC3 250M	2	406	80	484	484	374	349	445	168	60	M20	140	130	56	18	53	11	250	30	316	624	24	909	22	769	500	450	550	8-Ø18,5	5	305	230
HMC3 250M	4,6	406	80	484	484	374	349	445	168	65	M20	140	130	56	18	58	11	250	30	316	624	24	909	22	769	500	450	550	8-Ø18,5	5	305	230
HMC3 280S	2	457	85	542	546	403	368	485	190	65	M20	140	130	56	18	58	11	280	35	361	683	24	959	22	819	500	450	550	8-Ø18,5	5	305	230
HMC3 280S	4,6	457	85	542	546	403	368	485	190	75	M20	140	130	56	20	67,5	12	280	35	361	683	24	979	22	839	500	450	550	8-Ø18,5	5	305	230
HMC3 280M	2	457	85	542	546	403	419	536	190	65	M20	140	130	56	18	58	11	280	35	361	683	24	1010	22	870	500	450	550	8-Ø18,5	5	305	230
HMC3 280M	4,6	457	85	542	546	403	419	536	190	75	M20	140	130	56	20	67,5	12	280	35	361	683	24	1030	22	890	500	450	550	8-Ø18,5	5	305	230
HMC3 315S	2	508	120	628	618	546	406	570	216	65	M20	140	130	56	18	58	11	315	45	430	862	28	1193	22	1053	600	550	660	8-Ø24	6	400	280
HMC3 315S	4,6	508	120	628	618	547	406	570	216	80	M20	170	160	56	22	71	14	315	45	430	862	28	1223	22	1053	600	550	660	8-Ø24	6	400	280
HMC3 315M	2	508	120	628	618	546	457	680	216	65	M20	140	130	56	18	58	11	315	45	430	861	28	1303	22	1163	600	550	660	8-Ø24	6	400	280
HMC3 315M	4,6	508	120	628	618	546	457	680	216	80	M20	170	160	56	22	71	14	315	45	430	861	28	1333	22	1163	600	550	660	8-Ø24	6	400	280
HMC3 315L1	2	508	120	628	618	546	508	680	216	65	M20	140	130	56	18	58	11	315	45	430	861	28	1303	22	1163	600	550	660	8-Ø24	6	400	280
HMC3 315L1	4,6	508	120	628	618	546	508	680	216	80	M20	170	160	56	22	71	14	315	45	430	861	28	1333	22	1163	600	550	660	8-Ø24	6	400	280
HMC3 315L2	2	508	120	628	618	546	508	680	216	65	M20	140	130	56	18	58	11	315	45	430	861	28	1303	22	1163	600	550	660	8-Ø24	6	400	280
HMC3 315L2	4,6	508	120	628	618	546	508	680	216	80	M20	170	160	56	22	71	14	315	45	430	861	28	1333	22	1163	600	550	660	8-Ø24	6	400	280
HMC3 355M	2	610	116	726	699	664	560	750	254	75	M24	140	130	56	20	67,5	12	355	52	489,5	1019	28	1507	25	1367	740	680	800	8-Ø24	6	460	330
HMC3 355M	4,6	610	116	726	699	664	560	750	254	95	M24	170	160	56	25	86	14	355	52	489,5	1019	28	1537	25	1367	740	680	800	8-Ø24	6	460	330
HMC3 355L	2	610	116	726	699	664	630	750	254	75	M24	140	130	56	20	67,5	12	355	52	489,5	1019	28	1507	25	1367	740	680	800	8-Ø24	6	460	330
HMC3 355L	4,6	610	116	726	699	664	630	750	254	95	M24	170	160	56	25	86	14	355	52	489,5	1019	28	1537	25	1367	740	680	800	8-Ø24	6	460	330

Bearings and Terminal box

Bearings

	Drive End		None drive end	
Motor type	2 pole	4,6 pole	2 pole	4,6 pole
HMA3 80	6204-2Z/C3		6204-2Z/C3	
HMA3 90	6205-2Z/C3		6205-2Z/C3	
HMA3 100	6206-2Z/C3		6206-2Z/C3	
HMA3 112	6306-2Z/C3		6306-2Z/C3	
HMA3 132	6308-2Z/C3		6308-2Z/C3	
HMC3 160	6309-2Z/C3		6309-2Z/C3	
HMC3 180	6311-2Z/C3		6311-2Z/C3	
HMC3 200	6312/C3		6312/C3	
HMC3 225	6312/C3	6313/C3	6312/C3	
HMC3 250	6313/C3	6314/C3	6313/C3	
HMC3 280	6314/C3	6317/C3	6314/C3	
HMC3 315	6317/C3	6319/C3 NU319	6317/C3	6319/C3
HMC3 355	6319/C3	6322/C3 NU322	6319/C3	6322/C3

Terminal box

Motor type	Main Blindcaps	Ass. Blindcaps
HMA3 80	2xM20x1,5	/
HMA3 90	2xM20x1,5	/
HMA3 100	2xM20x1,5	1xM20x1,5
HMA3 112	2xM20x1,5	1xM20x1,5
HMA3 132	2xM25x1,5	1xM20x1,5
HMC3 160	2xM40x1,5	2xM20x1,5
HMC3 180	2xM40x1,5	2xM20x1,5
HMC3 200	2xM50x1,5	2xM20x1,5
HMC3 225	2xM50x1,5	2xM20x1,5
HMC3 250	2xM63x1,5	2xM20x1,5
HMC3 280	2xM63x1,5	2xM20x1,5
HMC3 315	2xM63x1,5	2xM20x1,5
HMC3 355	2xM72x2,0	2xM20x1,5

Rating plate

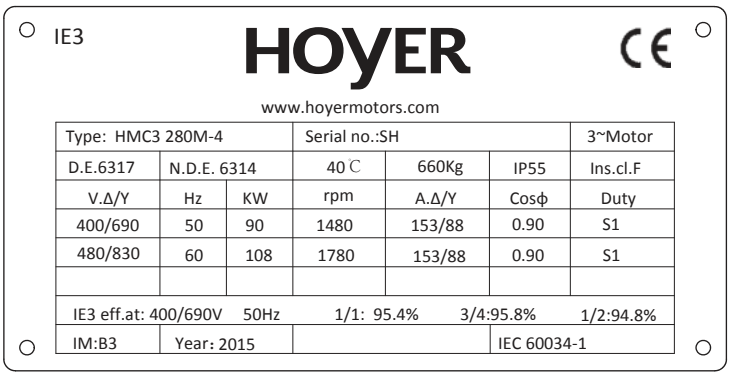

Rating table amb. temp.

Amb. temp.	30°C	35°C	40°C	45°C	50°C	55°C	60°C
P/P_N	1,05	1,02	1,00	0,97	0,93	0,87	0,82

Rating table altitude

Altitude	1000m	1500m	2000m	2500m	3000m	3500m	4000m
P/P_N	1,00	0,98	0,95	0,91	0,87	0,83	0,78

Workshop and Extras

Workshop

In combination with the wide-ranging stock our highly skilled and certified workshop secures the most flexible stock in the business. Among other things the options for rebuild includes:

- Anti condensation heating
- ATEX Zone 22 / 2 (ExnA)
- Special bearings
- SPM nipples
- Forced fan cooling
- Pt100 built in thermo sensors
- Balancing class “A” or “B” (IEC60034-14)
- IP56, IP65 and IP66
- TENV (IC410) for mounting on open deck
- Encoders

Extras

Due to the shared facilities with Hoyer Transmissions we are able to provide an unique combination of extras:

- Pulleys
- Taper locks
- Belts
- Motor slides and rails
- Couplings
- Locking elements

Mounting Positions

B3

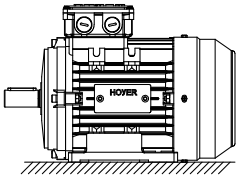

B6

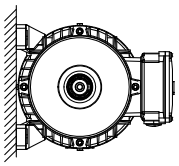

B7

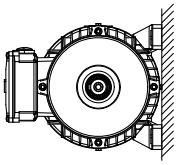

B8

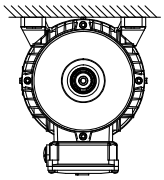

V5

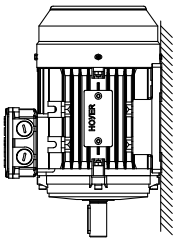

V6

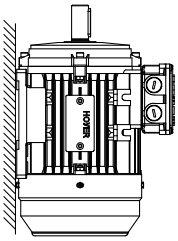

B5

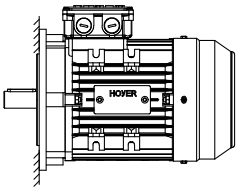

V1

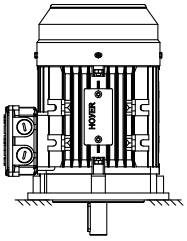

V3

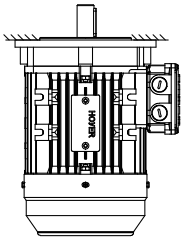

B35

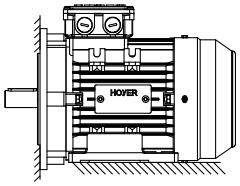

V15

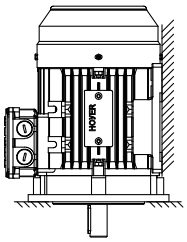

V35

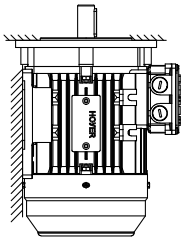

B14

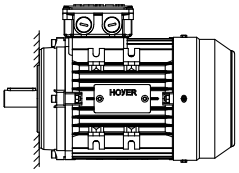

V18

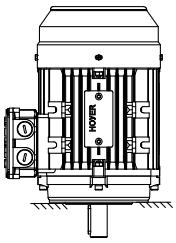

V19

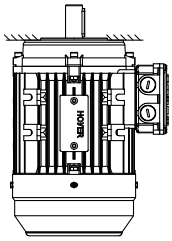

B34

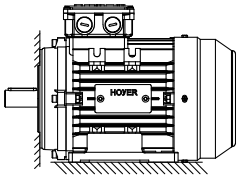

V17

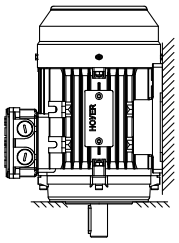

V37

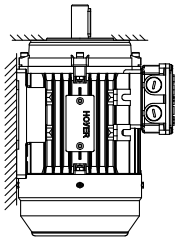

**Important notice:* V3 mounting with standard housing only accepted up to frame size 250. Motors frame size 280 and up need special housing and flange.

Drawings and Website

Drawings

At hoyermotors.com both 2D and 3D drawings of our IE3 programme are available for download.

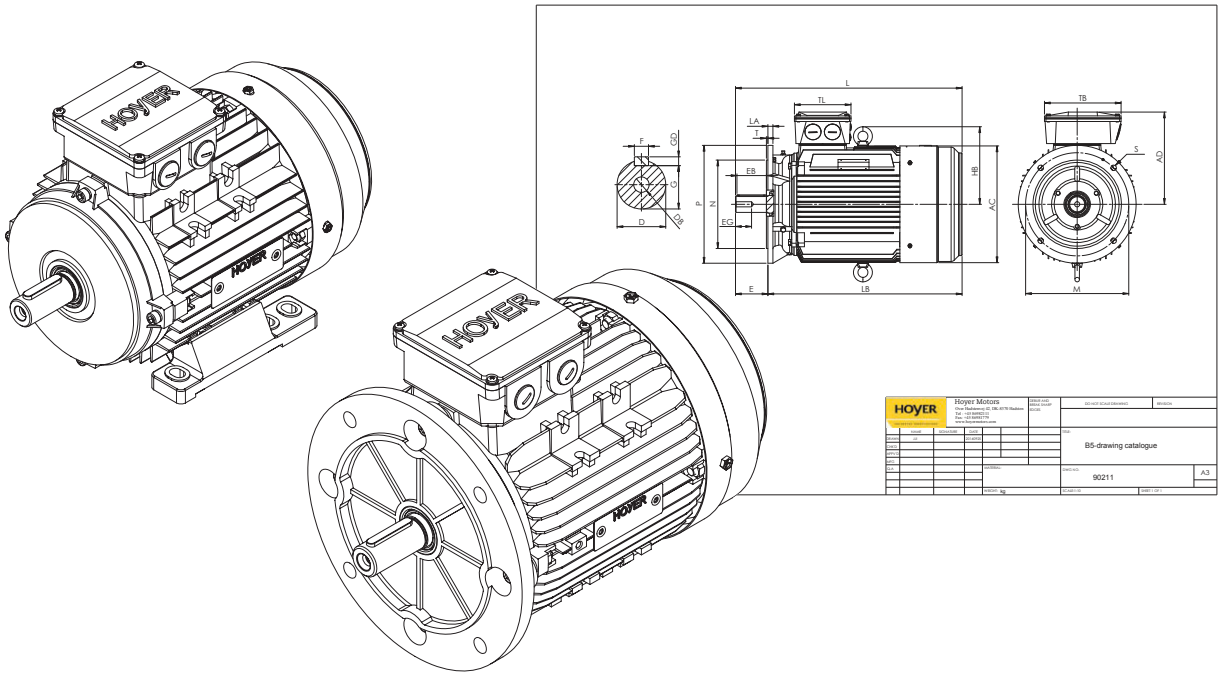

Website

As well as various drawings you are able to find data sheets, type tests and other relevant documentation and information at hoyermotors.com

Other Hoyer Catalogues

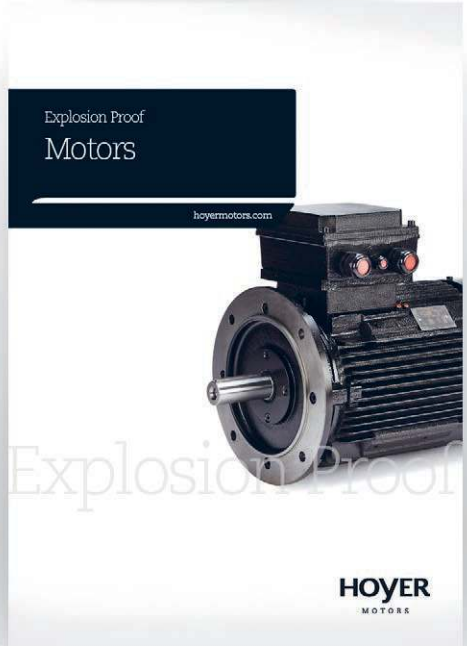

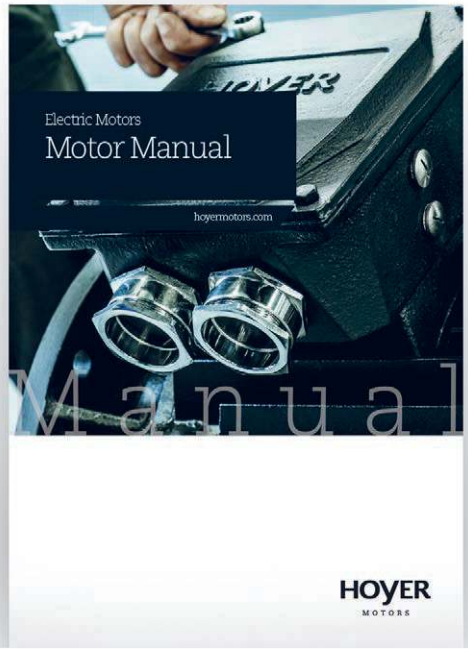

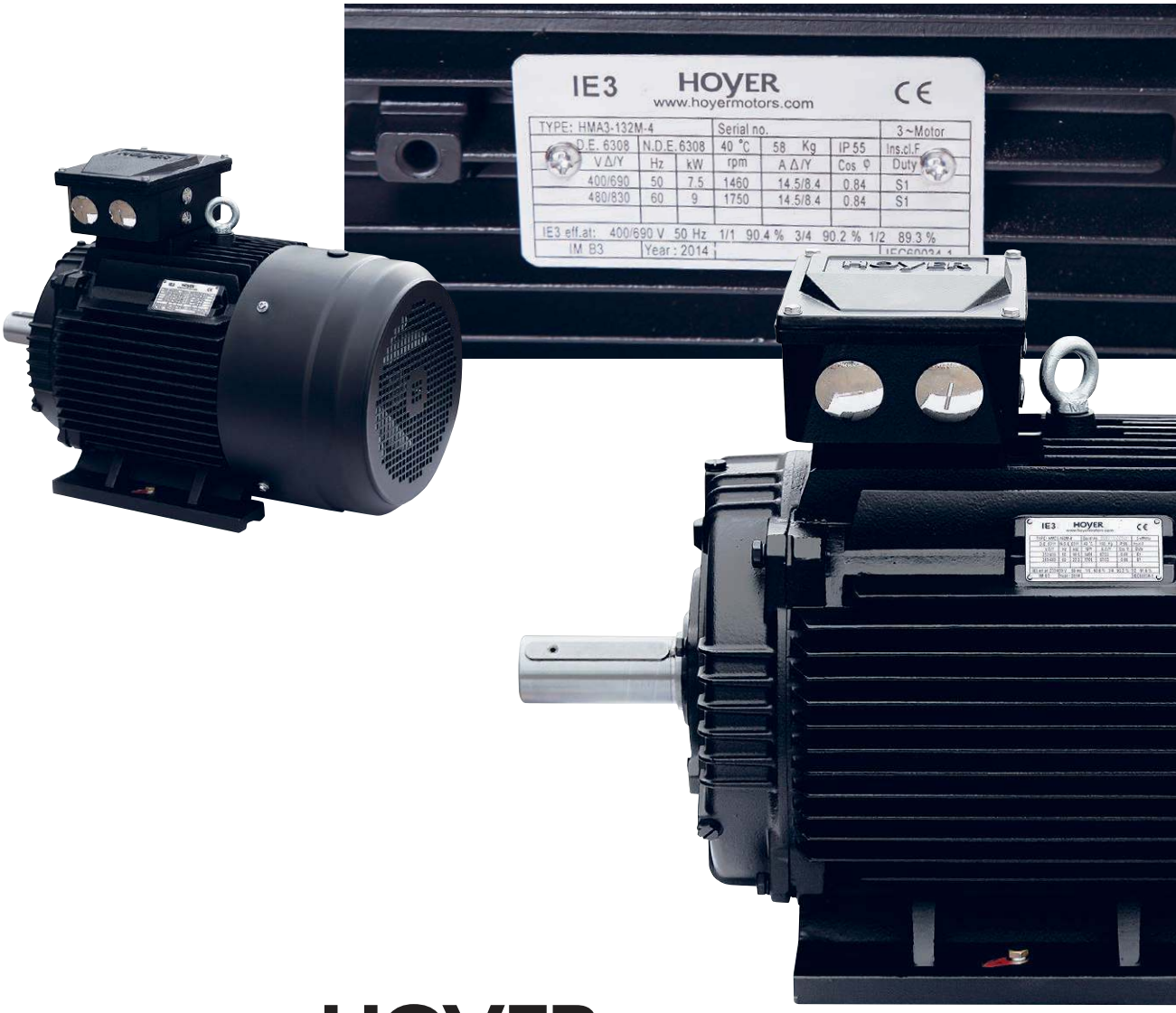

HOYER

EXCEEDING EXPECTATIONS

Hoyer Motors, IE3 Motors, June 2019

Head Offices
Denmark
Over Hadstenvej 42 · DK-8370 Hadsten
T +45 86 98 21 11 · F +45 86 98 17 79
hoyermotors@hoyermotors.com
hoyermotors.com

China
19 Jingwu Middle Road · Beilun District
Ningbo 315821 · Zhejiang
T +86 21 8036 4698 · F +86 574 2628 1573
hoyermotors@hoyermotors.cn
hoyermotors.cn

Branch Offices
Germany
Landsberger Straße 155 · 80687 München
T +49 89 700 88 235 · F +49 89 543 56 333
germany@hoyermotors.com
hoyermotors.com

Sweden
Liljeholmsstranden 5 · PO box 44017
SE-100 73 Stockholm
T +46 8 446 877 13 · F + 46 8 446 877 20
sweden@hoyermotors.com
hoyermotors.com

Benelux
Vasteland 78 · 3011 BN, Rotterdam
T +31 10 420 35 20 · F +31 10 420 44 51
benelux@hoyermotors.com
hoyermotors.com

Korea
302ho · Code square, 3150-1
Daejeo 2-dong · Gangseo-gu · Busan · Korea
T +82 51 944 1268 · F +82 51 996 0252
korea@hoyermotors.com
hoyermotors.com

Japan
Mizunobu Bldg 7F, 1-11-1, Kitasaiwai
Nishi-ku Yokohama
T +81 45 670 2323
japan@hoyermotors.com
hoyermotors.com

Important notice. Text and data in this catalogue are not binding and we reserve the right to implement changes without further notice.